Knapsack Granule Applicator

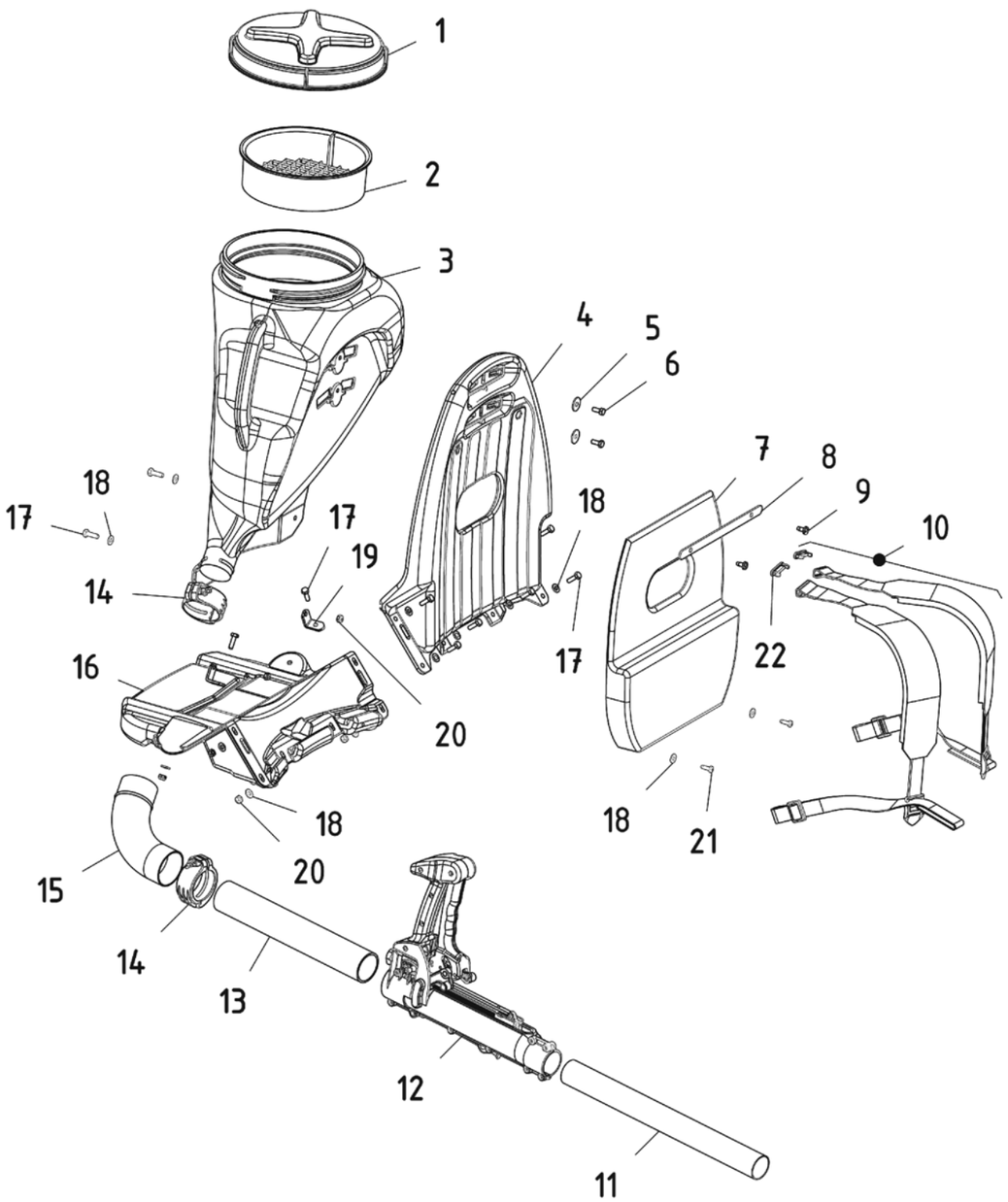

Other information: see Manual 104113.00.00

Code: 0475.00

ITEM	DESCRIPTION	CODE	PART/ PACK
1	Cap	10333	1
2	Sieve	10226	1
3	Tank	10078	1
4	Vertical frame	10032	1
5	Washer D6,5x22x1,2	2861	6
6	Screw M6x15	2885	2
7	Backrest frame	7065	1
8	Fixation plate	7027	1
9	Screw M6x10	10409	2
10	Complete belt set	10451	1
11	Discharge extension tube	10079	1
12	Manual command	8136	1
13	Discharge tube	10432	1
14	Complete clamp set	10452	2
15	Discharge hose	10080	1
16	Tank base	10093	1
17	Screw M6x20	10408	10
18	Washer D6x15x1,2	10411	16
19	Tank bracket	10225	2
20	Self-locking nut	10412	10
21	Nylon pin	10410	2
22	Belt fixation clip	6457	10

ITEM	DESCRIPTION	CODE	PART/ PACK