Manual Granule Applicator

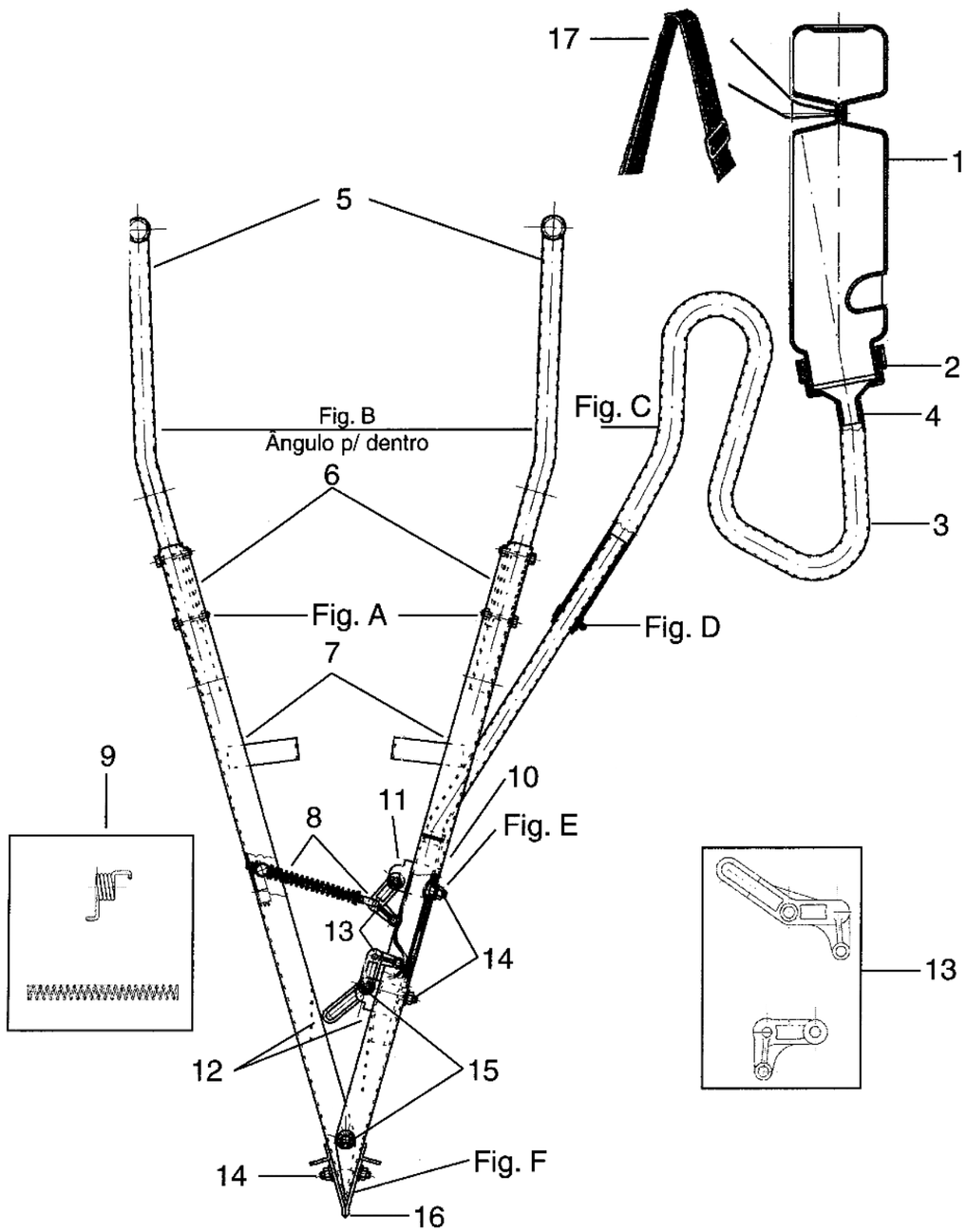

Other information: see Technical Bulletin 1138-04

Code: 0472.00

ITEM	DESCRIPTION	CODE	PART/ PACK
1	Chemical Tank With Lid	4540	1
2	Complete Lid	4541	1
3	Hose	6340	1
4	Clamp	2293	6
5	Right and Left Cable	4542	1
6	Cable Brackets	4543	1
7	Right and Left Structure	4553	1
8	Complete Operation Rod	4544	1
9	Rod and Lever Spring	4545	1
10	Dosage Hose	6319	1
11	Complete Upper Lever Support	4527	1
12	Complete Lower Lever Support	4453	1
13	Upper and Lower Dosage Lever	4548	1
14	Support and End Bolt	4549	1
15	Pins and Blocks Set	4550	1
16	Ends with Bolts	4551	1
17	Supporting Belt	4409	1

ITEM	DESCRIPTION	CODE	PART/ PACK